Brake Drum Ovality Signatures of Class-8 Heavy Vehicles from Performance-Based Brake Tester Information

Brake Drum Ovality

Brake drums of Class-8 heavy commercial motor vehicles (CMVs) undergo extreme stress and temperature changes, which are likely causes of brake drum deformation. As a brake drum cools down from high temperatures, it is believed that the setting of the parking brake can cause oval-like bowing or out-of-roundness to occur in the drum. Identifying ovality by physically measuring a drum is possible but time-consuming and non-ideal for a fast-paced CMV inspection station setting.

If the presence of ovality can negatively impact the brake performance of CMVs, continued investigation into identifying and quantifying ovality will be invaluable to road safety.

Performance-Based Brake Testers

Performance-Based Brake Testers (PBBTs) are roller dynamometers currently used to measure CMV brake efficiency. During a PBBT test, the CMV driver applies the brakes with increasing force as the PBBT keeps the wheels turning at a constant speed.

Oak Ridge National Laboratory collected monthly data on eight CMVs during the Brake Wear and Performance Test (BWPT) program (September 2007—May 2009). Disturbances in brake force versus time (BF v. t) profiles obtained from the BWPT PBBT tests may indicate the presence of brake drum deformation.

Methodology

Using Microsoft Excel, graphical disturbances were extracted from PBBT BF v. t data with the procedure shown in Figure 1 on the Greene Coach bus 190 (GC 190).

A MATLAB program was developed that takes in filtered disturbance signature information and returns reference values representing average magnitude differences in force over time. The filtered GC 190 data was processed through this program.

A one day Short-Term Ovality Test was performed on bus GC 198 to obtain several PBBT tests on the same vehicle. As shown in Figure 2, it appears that similar disturbance signatures are consistently present on the same wheel-ends of GC 198. It is therefore likely that one test per month on a BWPT vehicle contains a good representation of its disturbance signatures. Considering the practical inspection station testing environment, the methodology is still robust enough to legitimately extract disturbance signatures.

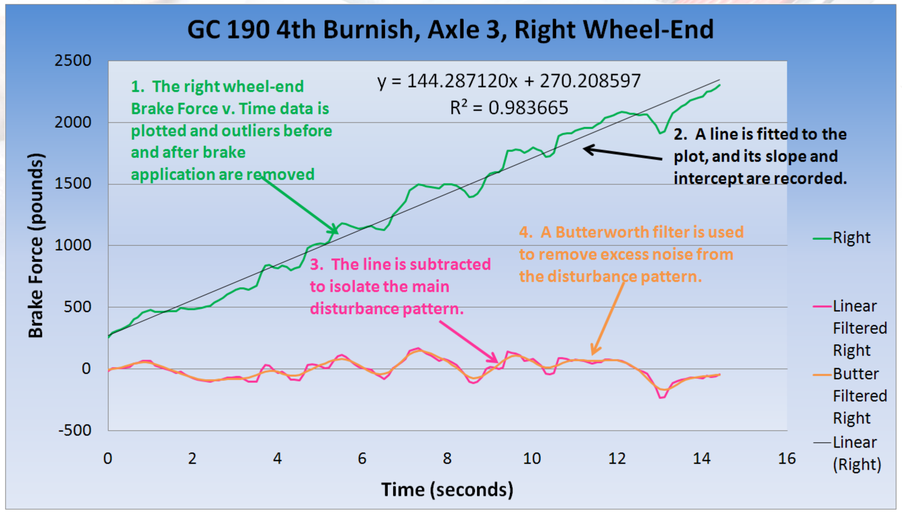

Figure 1: Process for Disturbance Signature Extraction.
This filtering process was performed on each wheel-end of GC 190 for each BWPT PBBT test. An ovality signature was expected to have a period of approximately 2.5 seconds.

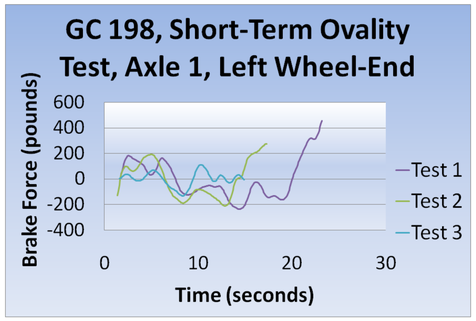

Figure 2: GC 198 Disturbance Signature Comparison.
Even with different ways of conducting the PBBT test, the same signatures can still be extracted from the BF v. t data on the same vehicle.

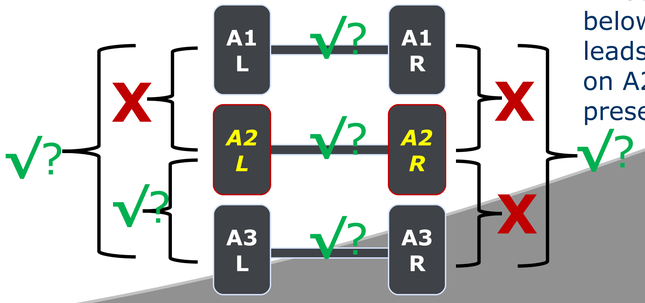

Figure 3: GC 190 Paired Wheel-End Comparison.
A1 L represents the first axle, left side, etc.
An X indicates that the null hypothesis of equal disturbance signatures was rejected with at least 97% confidence, and a √? indicates it was not rejected.

Statistics Results

Paired mean t-tests were performed on the GC 190 reference values obtained from MATLAB. See Figure 3 for the results between paired wheel-ends of GC 190.

If it can be rejected that any two wheel-ends show the same disturbance pattern, there is a strong inference that each wheel-end of the CMV has a unique disturbance signature associated with it. This seems to be the case with GC 190, especially with axle two (A2).

A2 left and right sides have average reference factor magnitudes around 120 and 130 pounds per second, respectively. All other wheel-ends exhibit magnitudes below 100 pounds per second, which leads us to believe that the brake drums on A2 are likely candidates for ovality presence.

Rachel Andrews
Georgia Institute of Technology
Oscar Franzese
Energy & Transportation Science Division

Acknowledgements:
Gary Capps, Mary Beth Lascurain
Energy & Transportation Science Division
Zane Pannell
Pellissippi State Community College
Greene Coach Tours, Greeneville, TN
Greene County Inspection Station, Greeneville, TN